P&P plus

10 YEAR WARRANTY

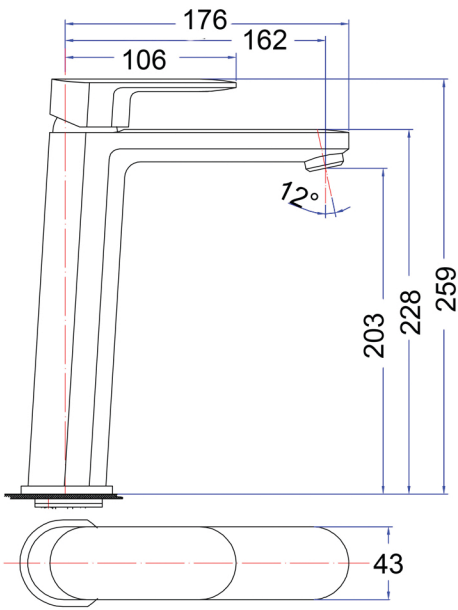

WATER RATING
www.waterrating.gov.au
5.0 litres per minute
In accordance with AS3625:2000
Licence No. 0175
ACL Company Pty Ltd

CORA HIGH RISE BASIN MIXER — PBR2002-B

FINISH: Electroplate Matt Black
WORKING PRESSURES: 150-500kpa
OPERATING TEMPERATURE: 1°C to 70°C
WELS: 5 STAR 5L PER MIN
CARTRIDGE TYPE: 35mm Cartridge

WARRANTY:
10 year Ceramic disk cartridges-parts only
Note: Excludes damage to ceramic disk cartridges from pieces of copper tube, plastic tube, sand, dirt or thread tape etc.
5 year replacement products or parts
1 year replacement products or parts and labour

FOR MORE INFORMATION VISIT
www.aclco.com.au

EMAIL: sales@aclcompany.com.au www.aclco.com.au **Tel:** 02 9647 1383

acl COMPANY PTY LTD