ikon

15 YEAR WARRANTY

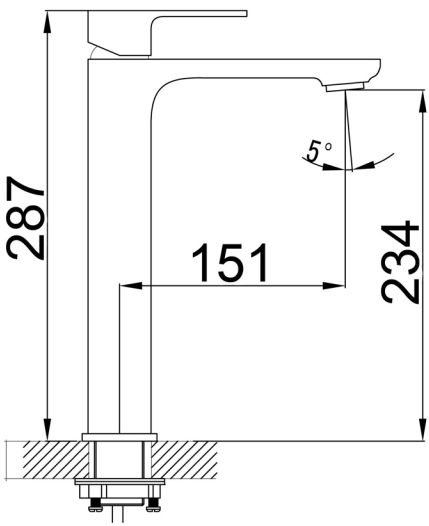

The more stars the more water efficient
WATER RATING
www.waterrating.gov.au
5.0 litres per minute
In accordance with AS/NZS 6400
Licence No. 0175
ACL Company Pty Ltd

SETO HIGH RISE BASIN MIXER — HYB66-202CW

FINISH: Chrome & White
WORKING PRESSURES: 150-500kpa
OPERATING TEMPERATURE: 1°C to 70°C
WELS: 5 STAR 5.0L PER MIN
CARTRIDGE TYPE: Kerox 35mm Cartridge
AERATOR: Neoperl

Please visit https://www.aclco.com.au/warranty.html for the full warranty.